Design and Development of a Wall Traversing Robot for inspection purposes

CDRB REPORT

Advisor

Capt. Dr. Attaullah Y. Memon

Group Members

Syed Hasnain Rizvi

Hasan Rehman

MUhammad Asfandyar Khan

Hamis Yawar

PN ENGINEERING COLLEGE, PNS JAUHAR,
HABIB REHMATULLAH ROAD, KARACHI 75350

Table of Contents

Abstract 3

Introduction 4

Problem statement 5

General Concept 5

Literature Review 5

Proposed Methodology 7

Kinematic Analysis

Locomotion 7

Adhesion 8

Mechanical Design 8

Selection of EDF 9

Selection of Microcontroller 9

Selection of Battery 9

Control and Communication 10

Applications 12

Gantt Chart 13

Abstract

The purpose of this project primarily deals with the design and development of a robot that can traverse a ceiling or a vertical plane at a considerable height. Negative thrust based suction will be used to hold the robot against the vertical surface and 4-wheel motor combination for locomotion. The robot can be controlled manually or can be automated to traverse in multiple directions across the surface and can be utilized for numerous applications, such as security inspection, glass wall cleaning, pattern drawing, safety monitoring, fire rescue, and videography from complicated angles. It will further reduce safety hazards for people working at elevated levels and in those areas where it is difficult for humans to reach.

Introduction

The advent of robotics as we know dates back to 20th century when George C. Devol, an inventor from Kentucky, patented a reprogrammable manipulator named “Unimate”. This is however a contraption from a long time ago. Presently, robotics is a vast field which has applications in virtually every aspect of life. From automating processes in the industry to creating machines for household tasks, robots have become the norm.

The major reasons for the usage of robots is improvement in productivity, efficiency and reduction of manual work. This also involves enhancing the safety and protection of human life. For instance, construction at high rise buildings puts human life in jeopardy . A 2006 Bureau of Labor Statistics reported 1226 deaths in construction workplaces, out of which 809 were a result of falls from raised structures. Such instances open up a window of demand for development of robots which can take over manual workforce and reduce the troubling safety hazards.

Operations at elevated surfaces might prefer the use of drone technology but, drones and quadcopters are confined to tasks where no surface contact is required. To fill this void, development of wall climbing robots was worked upon, with different mechanisms for locomotion on vertical surface. Different procedures of adhesion, suction and thrust were tested to attain competent outcomes.

This project will be employing the method of negative thrust by an Electric Duct Fan, with a gear-motor mechanism for locomotion. The goal of this project is to build a modular robot, which can traverse on complicated vertical and elevated surfaces where human intervention poses threats. It will act as a platform for various applications where related mechanisms for the role can be integrated with the base model. Applications such as surveillance, emergency rescue, cleaning, pattern illustration and image processing can be incorporated with the module.

Problem Statement

The objective of this project is to design, fabricate and develop a modular robot which can traverse on vertical and elevated surfaces with an effective communication system enabling it to be controlled manually or traverse autonomously. This project aims to aid in improving safety of people working at heights and other dangerous sites by removing the need of manual work in respective areas.

General Concept

In order to achieve this objective, the project has been divided into a list of landmarks that have to be hit in order to obtain the final product. The list of landmarks is as follows:

1. Develop a modular, open source design that can be implemented for various applications.
2. Fabricate a model using Solidworks which is mechanically stable and efficient.
3. Analyze the kinematics for thrust and locomotion of the robot.
4. Decide the model of EDF for negative thrust.
5. Determine the robot's orientation with the use of sensors.
6. Design and implement a remote-control system
7. Design and implement a method for autonomous movement.
8. Integration of On Board Computer for various applications.

Literature Review

The research and development of robots which can climb and move on vertical surfaces has been in progress, with different mechanisms and methods to achieve their tasks. We can go back a bit far as 1994 when research was carried out for robots which can inspect nuclear plants.

In recent past, various other designs were tested and implemented in order to achieve a light weighted, cost efficient and a reliable robot. Robots based on adhesion, suction and pneumatic principles were developed to achieve the task. Majority of the research is done the design rather than actual realization of the robot.

Year	Research Paper	Authors
1994	Robicen: A wall-climbing pneumatic robot for inspection in nuclear power plants	Leoncio Briones, Paul Bustamante and Miguel A.Serna[§]
1994	Wall-climbing robot for inspection in nuclear power plants	L. Briones , P. Bustamante , M.A. Serna
2002	A low-cost lightweight climbing robot for the inspection of vertical surfaces	Guido La Rosa Michele Messina, Giovanni Muscato and Rosario Sinatra
2011	Wall Climbing Robots with Track-wheel Mechanism	Giuk Lee, Junhwan Park, Hwang Kim, Kunchan Seo, Jongwon Kim and TaeWon Seo
2011	Wall climbing robot: Mechanical design and implementation	Abdul gani Albagul, A Asseni and Othman O. Khalifa
2013	Climbing Robots for Maintenance and Inspection of Vertical Structures	Daniel Schmidt and Karsten Berns

2014	A Low-Cost, Light-Weight Climbing Robot for Inspection of Class Curtains	Ran Liang, Meteb Altaf, Eball Ahmad and Rong Liu, Ke Wang
2015	Wall Climbing Robot for Inspection of Wall Using Digital Image Processing	Behera, Abyarth Kumar
2015	Development of a Wall Climbing Inspection Robot with High Mobility on Complex Shaped Walls	Yuan Chang
2016	A survey on pneumatic wall-climbing robots for inspection	Angellica Brussel, George Andrikopoulos and George Nikolakopoulos
2016	Wall Climbing Robot for Dust Cleaning in a High Risk Buildings	R. Geethanjali, Mr.M.Sudhakaran, Dr.R. Seyezhai
2017	Wall Climbing Robot based on Suction Technique	Khyati Meena, Shubham Gupta and Vijay Khare
2017	Tele-operated propeller-type climbing robot for inspection of petrochemical vessel	Alkalla, M., Fanni, M., Mohamed, A. and Hashimoto, S.

Proposed Methodology

In most of the aforementioned studies, a considerable amount of money and time has been spent in the design of the robot. They are expensive in their fabrication and complex in their control mechanisms.

The aim of this project is to present a modular, scalable design that can be used as a platform for any wall traversing robot. This will allow upcoming researchers to spend their time and money on locomotion/automation algorithm improvements instead of robot design and fabrication.

The robot has thus been divided into two workspaces, the Mechanical structure of the robot and the Electronics.

The mechanical structure consists of complete design and fabrication of the body. The electronic structure can be divided into two subsections: Control system and communication system. The duty of the control system is to manage the thrust, locomotion and actuation of the robot. The communication system has to achieve proper connection from the outside devices such as remote and path planner.

Kinematics Analysis

LOCOMOTION

Our wall traversing robot is motor driven by 4 hub mounted motors on each of its four wheel. The rotation of these motors will control the direction in which it is traversing. If all the motors rotate in the same direction, the robot will move in that direction. A differential between the right and left motors will steer the robot in its respective direction.

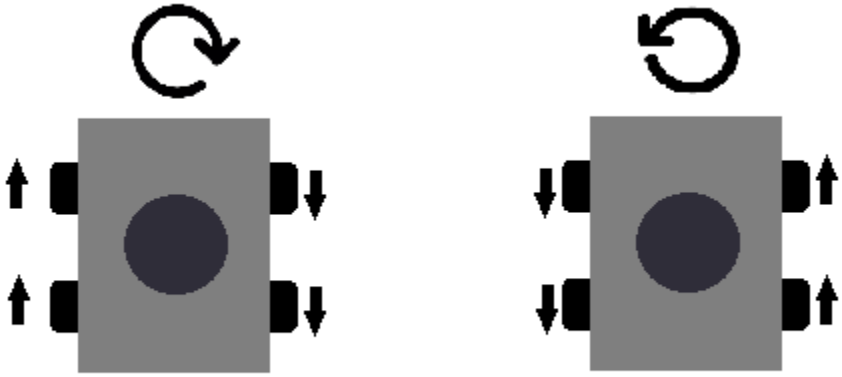

ADHESION

The robot's wall clinging mechanism is based on negative thrust exerted by the EDF unit. Negative thrust will push the robot against the wall and in turn cling it to the wall. The minimum force needed to push the robot is given by the formula:

$$F = \frac{m.g}{\mu}$$

where F is the force exerted on the wall

m is the mass of the robot

g is the gravitational pull exerted on to the robot

μ is the coefficient of friction between the tyres of the robot and the material of the wall.

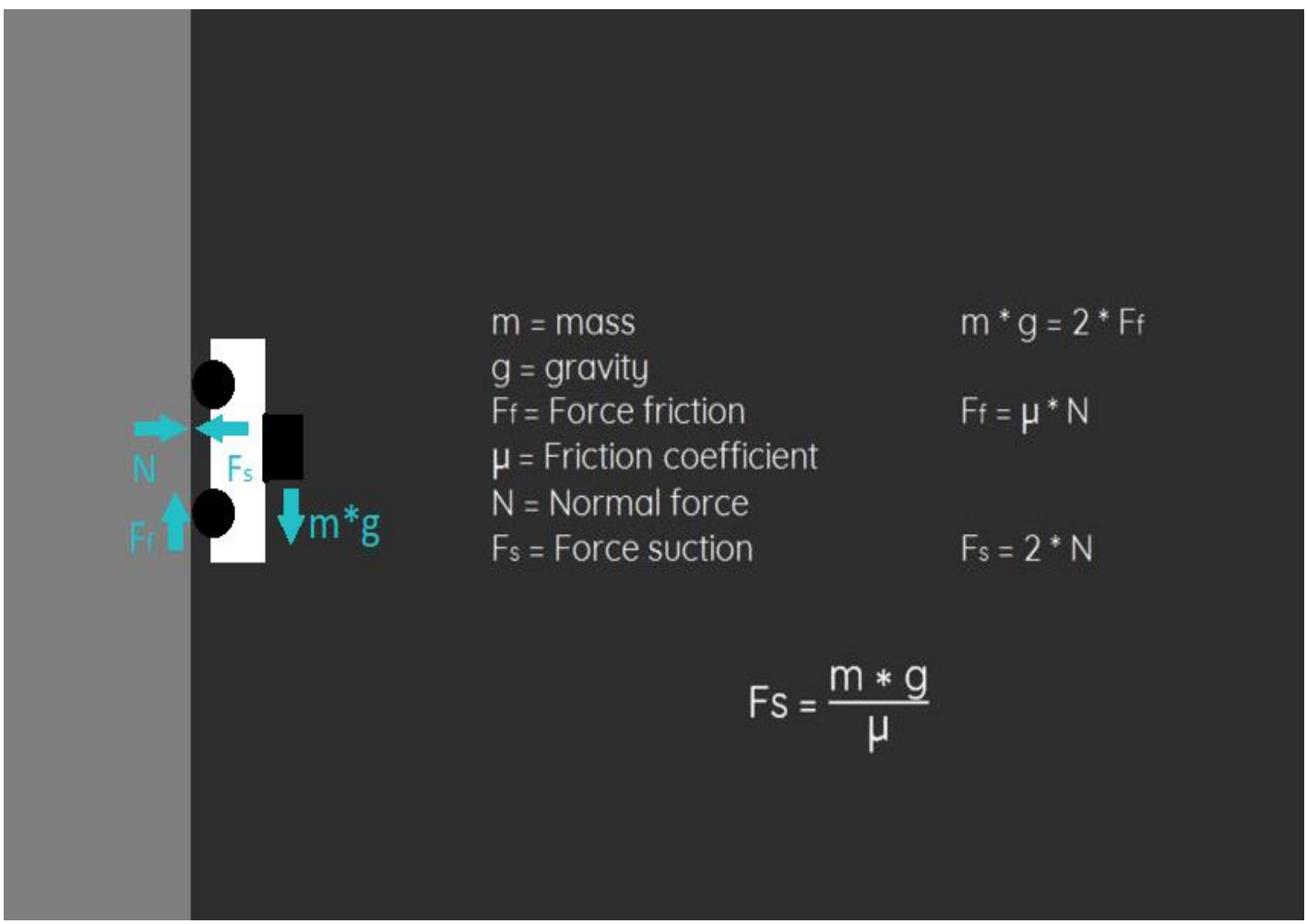

Mechanical Design

The mechanical design this project is primarily divided into two parts:

1. Canopy: This will be the upper part and will be 3D printed using materials such as ABS or PLA.

2. Base Plate Chassis: This will be the lower part which will be made of acrylic.All the components will be mounted on this structure.

We place the Electric Duct Fan at our assumed Centre of Gravity (CG) point of the body. The rest of the components are aligned with CG's lateral axis. The Base Plate Chassis is chosen as to lower the components of the robot, as the CG of the robot will be effected if their positions are changed. Nyloc nuts have been used to reduce the vibrations.

According to model analysis, brackets and mounts are used for effective maintenance and will nyloc nuts will damp the vibrations.

A cockpit structure will be used for integration which will create a cavity, which will be helpful in harnessing. Overall, the robot has a symmetric aerodynamic shape which will reduce drag.

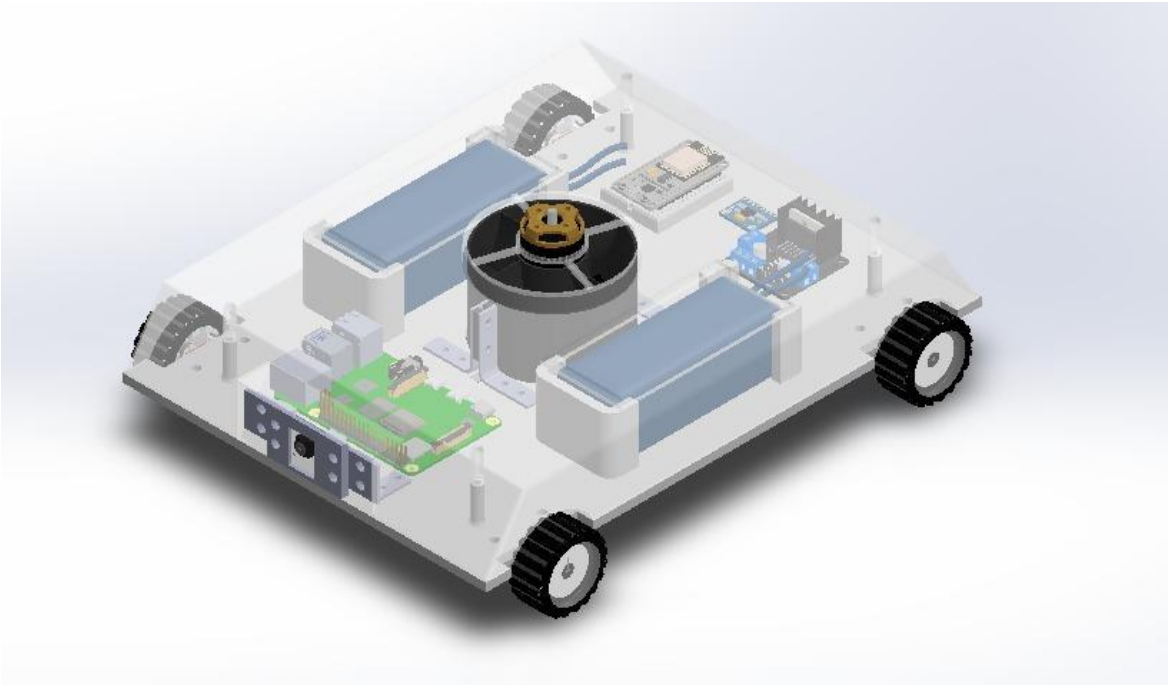

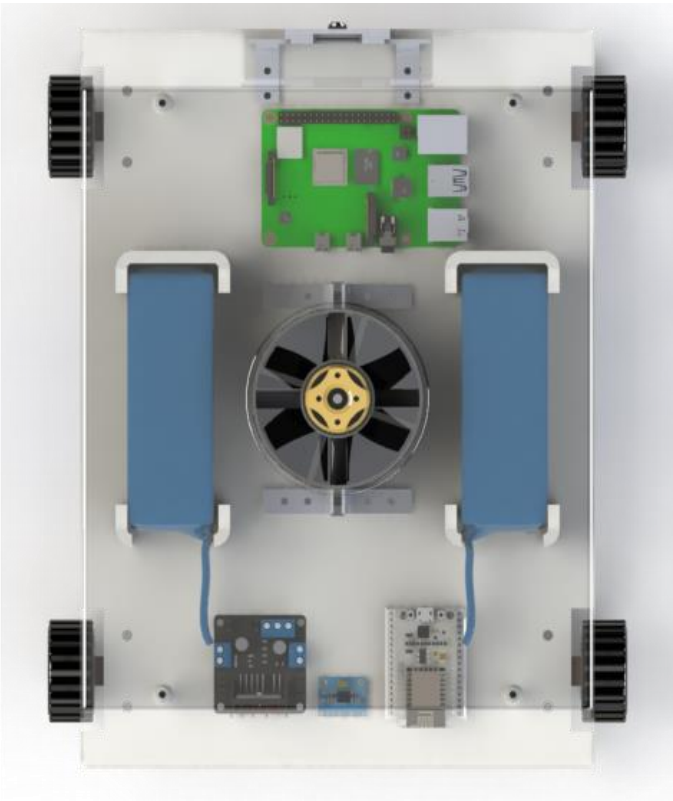

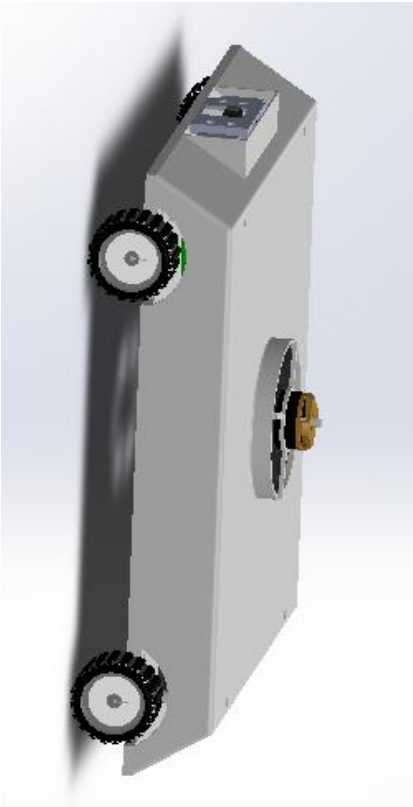

Selection of EDF:

The method of negative thrust will be used in this robot for clinging to the vertical surfaces. An Electric Ducted Fan (EDF) is selected based on calculations to provide the best thrust to weight ratio. The EDF is chosen by analyzing its thrust and comparing it with the expected mass of the robot. An ESC is also selected alongside which controls the required current for an EDF. This robot will be using a QX-Motor 70mm 6 Blade EDF unit with 2300KV Brushless Motor.

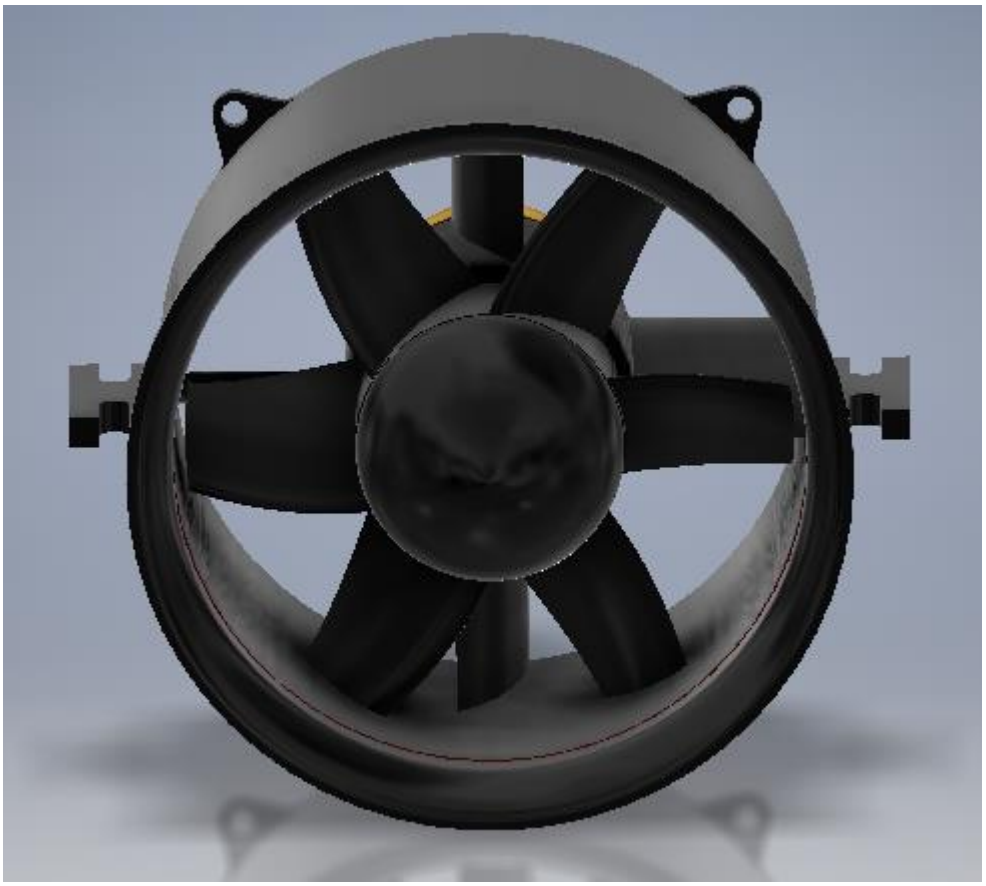

Selection of Microcontroller:

The control functions will be operated using the microcontroller so should have all the means for communication with EDF, gear motors and sensors. NodeMCU was selected on the basis of its features which fulfills our requirements.

Node MCU

NodeMCU is based on the Esperessif ESP8266-12E WiFi System-On-Chip, loaded with an open-source, Lua-based firmware. it's perfect for IoT applications, and other situations where wireless connectivity is required. This chip has a great deal in common with the Arduino – they're both microcontroller-equipped prototyping boards which can be programmed using the Arduino IDE.A brief detail about NodeMCU:

NodeMCU comes with a good spaced of 128KB RAM

It has 4MBytes of ROM (flash).

It comes with micro USB port which is readily available.

NodeMCU development board is smaller in size compared to Arduino UNO.

It has almost the same price as other controllers but with additional features.

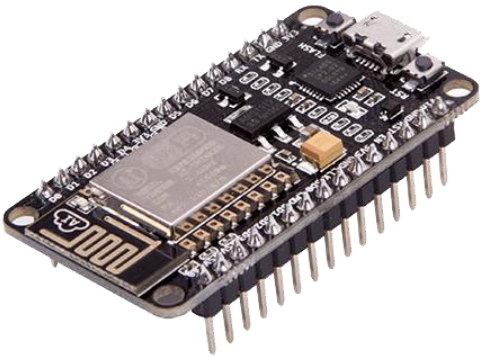

Selection of Battery:

Since the robot will be traversing along complicated surfaces for various applications, it needs a considerable working time for operation. Thus, battery selection is an important process which directly controls the operating time of the robot.

The batteries will be providing approximately 5-6 minutes of operation which is sufficient for the relevant tasks for the robot. The batteries are carefully selected so it does not contribute majorly to the total weight of the robot and can provide maximum time period. A couple of 2200mAh batteries will be used in this project.

Control and Communication

The robot can be controlled in one of the two ways; manually and path following. To control the robot, it requires a controller.

The controller will retrieve data from the accelerometer and gyroscope to accurately determine the position and orientation of the robot to maintain stability while traversing either on the wall or the ceiling. It will also receive input data from camera for inspection. To successfully accomplish these tasks, NodeMCU was the most feasible option, whose specifications are given in Fig 1.

NodeMCU Development board is featured with WIFI capability, Analog pin, Digital pins and Serial communication protocols.

Operating Voltage	3.3 V
Input Voltage	7-12V
Current consumption	10uA~170mA
Flash memory	4 MB
WI-FI	IEEE 802.11 b/g/n
Microprocessor	Tensilica 32-bit RISC CPU Xtensa LX106
Clock speed	80MHz
SRAM	64 KB
GPIOs	17 (multiplexed with other functions)
UART/I2C/SPI	1 Each

The NodeMCU also has a distinct advantage over other controllers that it comes with a built-in ESP8266 Wi-Fi chip. It has a low power consumption compared to other controllers. It also has a higher RAM and flash memory, which means the only limit on the software will be the processing time, not memory.

MANUAL CONTROL

To control the robot manually, we will use the ESP8266 chip to connect to a web server and program it to follow the commands input provided by the user. This can be accessed through any web browser.

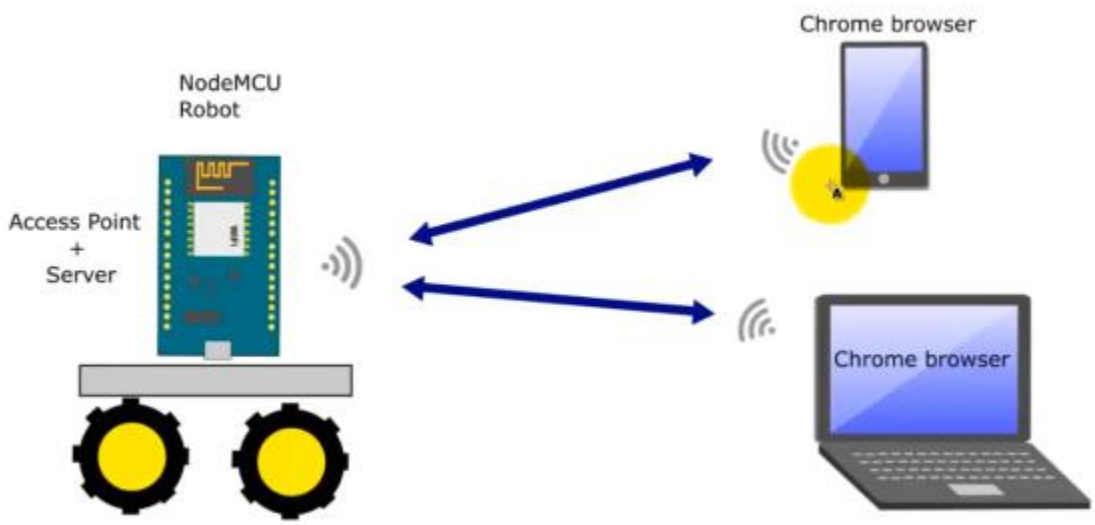

MISSION PLANNING

To control the robot for path following, the Processing IDE will be utilized. Processing is a great source for creating graphics. It has been used to create a visual representation of the path we want the robot to follow instead of coding it directly.

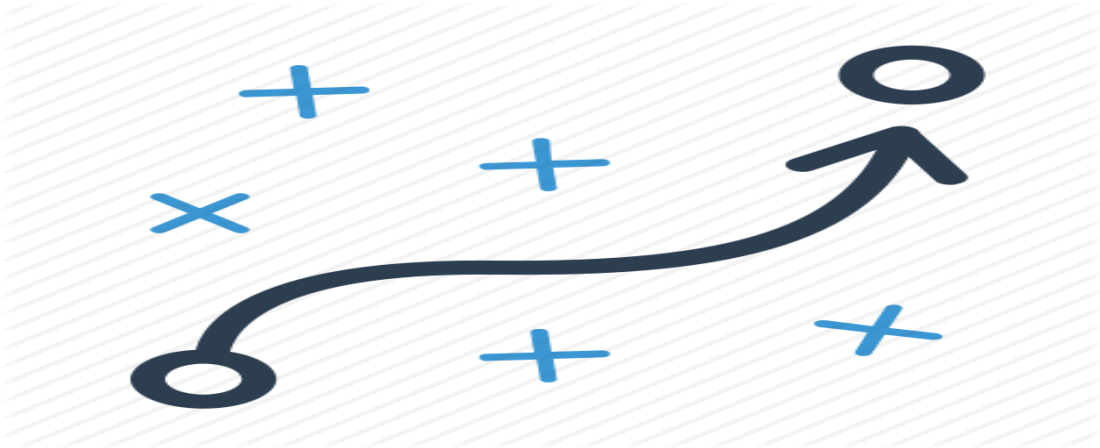

FLOW DIAGRAM

Main control unit of our robot is the NodeMCU. It will control the movement of the gear motors and EDF, via ESC, based on the input it received from the controlling device (laptop, mobile). The sensors will constantly input their data into the NodeMCU which will process it accordingly. One such data would be the acceleration which was later processed to know the position of the robot. Raspberry pi is an additional computing unit for multiple applications in the future. We are using it to detect the images.

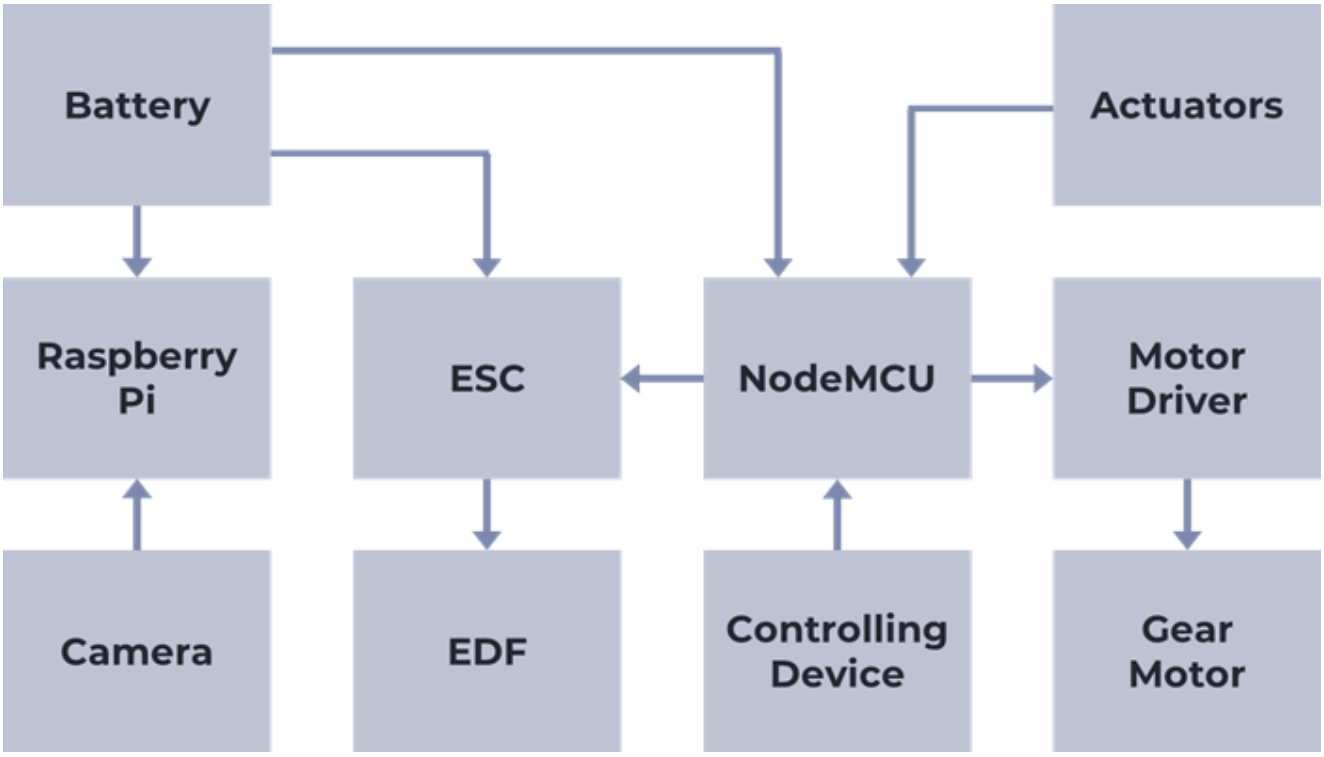

Applications

The applications of wall traversing robots can be numerous as their nature of work is dangerous if done by a human. These robots can perform their jobs at heights and also at locations which has safety concerns such as:

- Surveillance and security inspection at towers, in industries etc.
- Pattern drawing and painting on ships, planes etc.
- Cleaning of high-rise glass buildings.
- Inspection in places which has radiation hazards such as nuclear plants.
- Fire rescue operations
- Crack detection in pipelines, walls, wind turbine etc.

The major advantage of a robot in dangerous environments is that it doesn't necessarily have to come back. Its existence pales in comparison to a human life, thus creating a vast array of opportunities for its use.

Gantt Chart

2019
Sep
Oct
Nov
Dec
2020
Feb
Mar
Apr
2020
Today
Project Selection
1 Sep - 13 Sep
Background Research
10 Sep - 3 Oct
Literature Review
25 Sep - 7 Oct
Hourlies Break
7 Oct - 10 Oct
Design Considerations & Compoenent Selection
11 Oct - 25 Oct
Mechanical Design
22 Oct - 10 Nov
Hourlies Break
15 Nov - 19 Nov
CDRB Presentation
20 Nov - 20 Nov
Control Programming
21 Nov - 20 Dec
Orientation Sensors
2 Dec - 20 Dec
Finals Break
21 Dec - 6 Jan
Initial Testing of First prototype
7 Jan - 21 Jan
Payload Mounting
22 Jan - 28 Jan
Design Improvements
28 Jan - 20 Feb
DAB Presentation
21 Feb - 22 Feb
Procurement of Components
22 Feb - 6 Mar
Manufacturing
1 Mar - 14 Mar
Integration
8 Mar - 21 Mar
Robot Testing
22 Mar - 31 Mar
Troubleshooting
30 Mar - 13 Apr
Finalization of Project
14 Apr - 20 Apr